AIRSEP TYPICAL (MEDICAL) CYLINDER FILLING PLANT PROCESS & INSTRUMENTATION DIAGRAM (SKIDDED OR NON–SKIDDED)

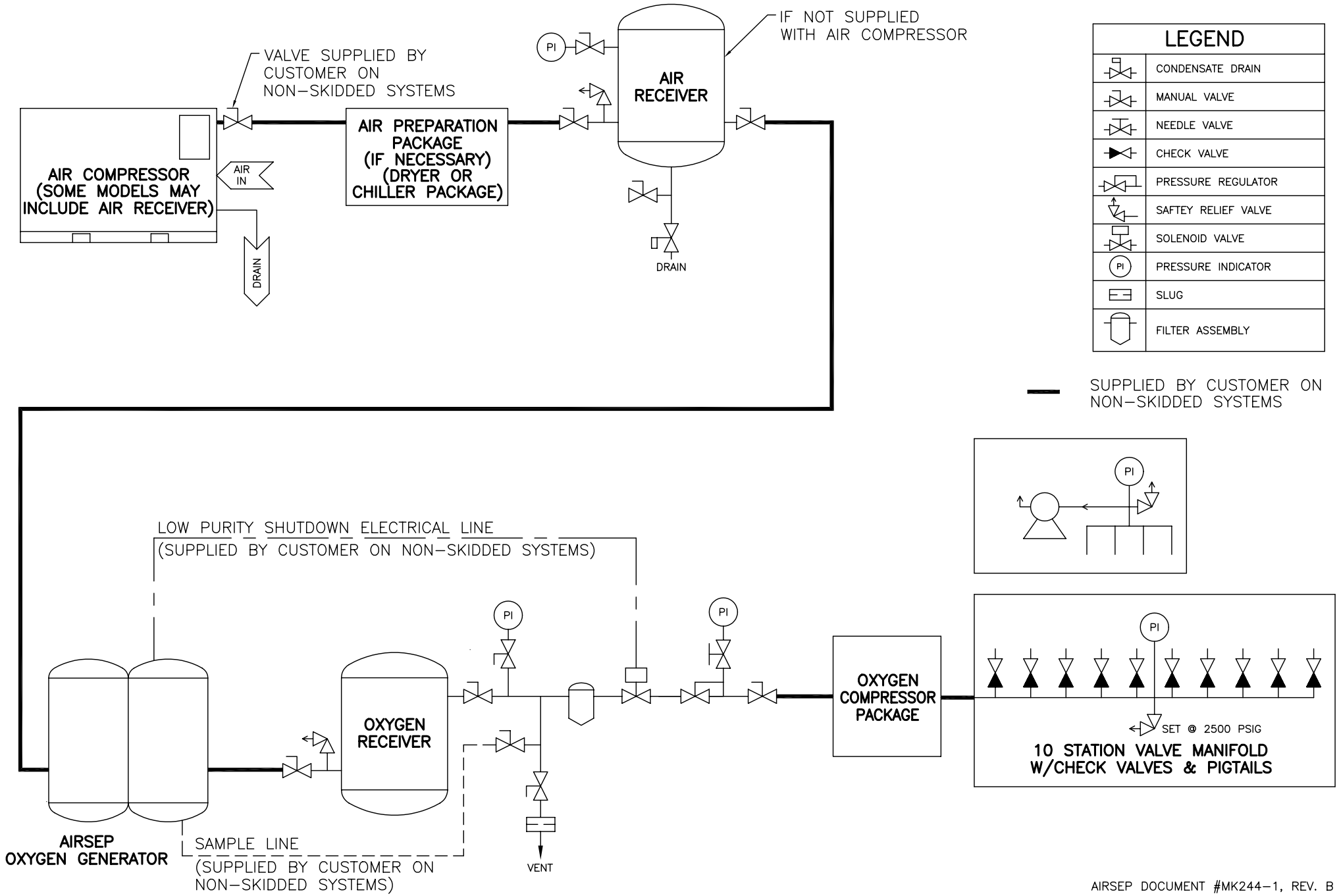

AIRSEP DOCUMENT #MK244–1, REV. B