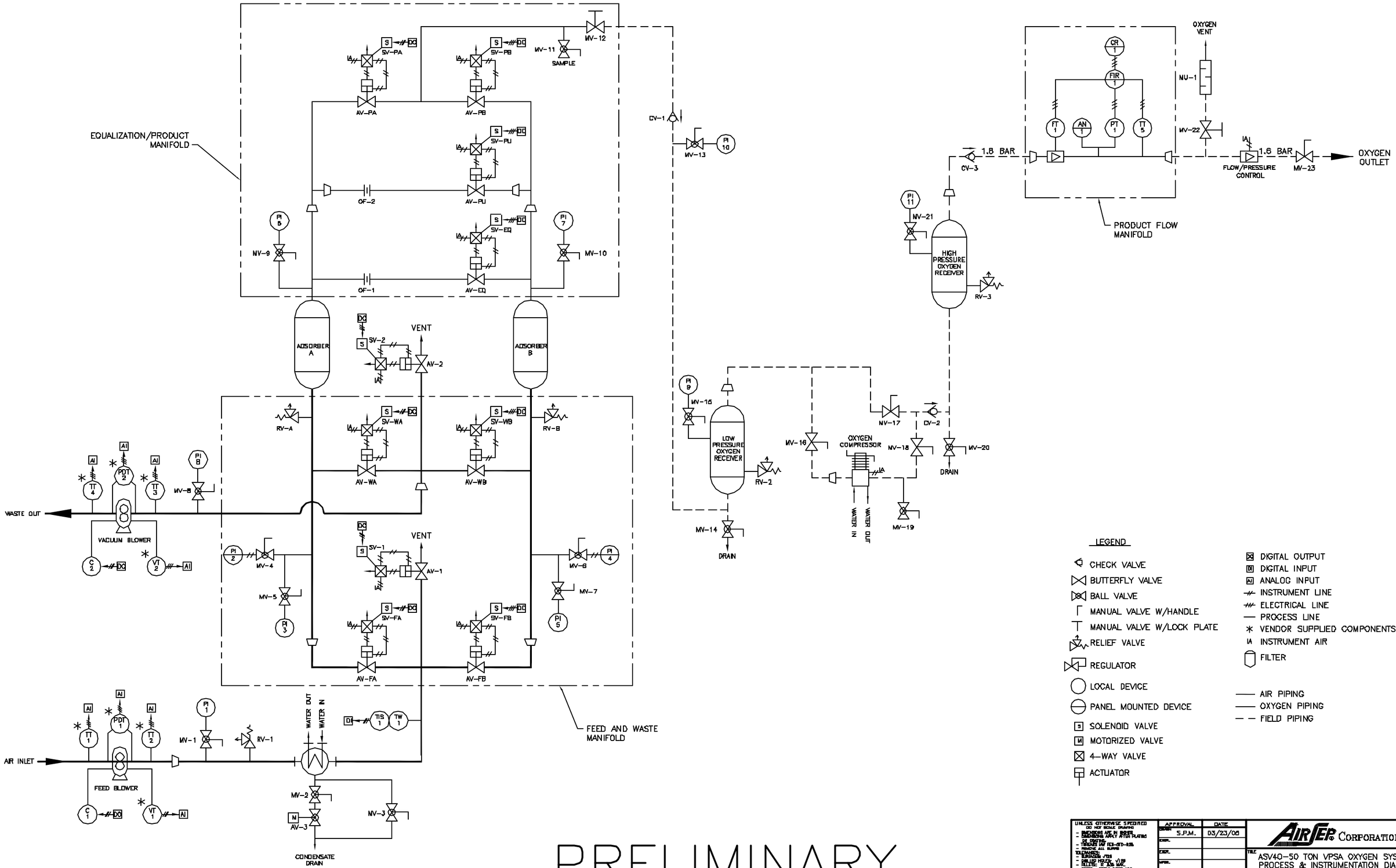

REV.	REVISION	ECN #	BY	DATE	APPD.